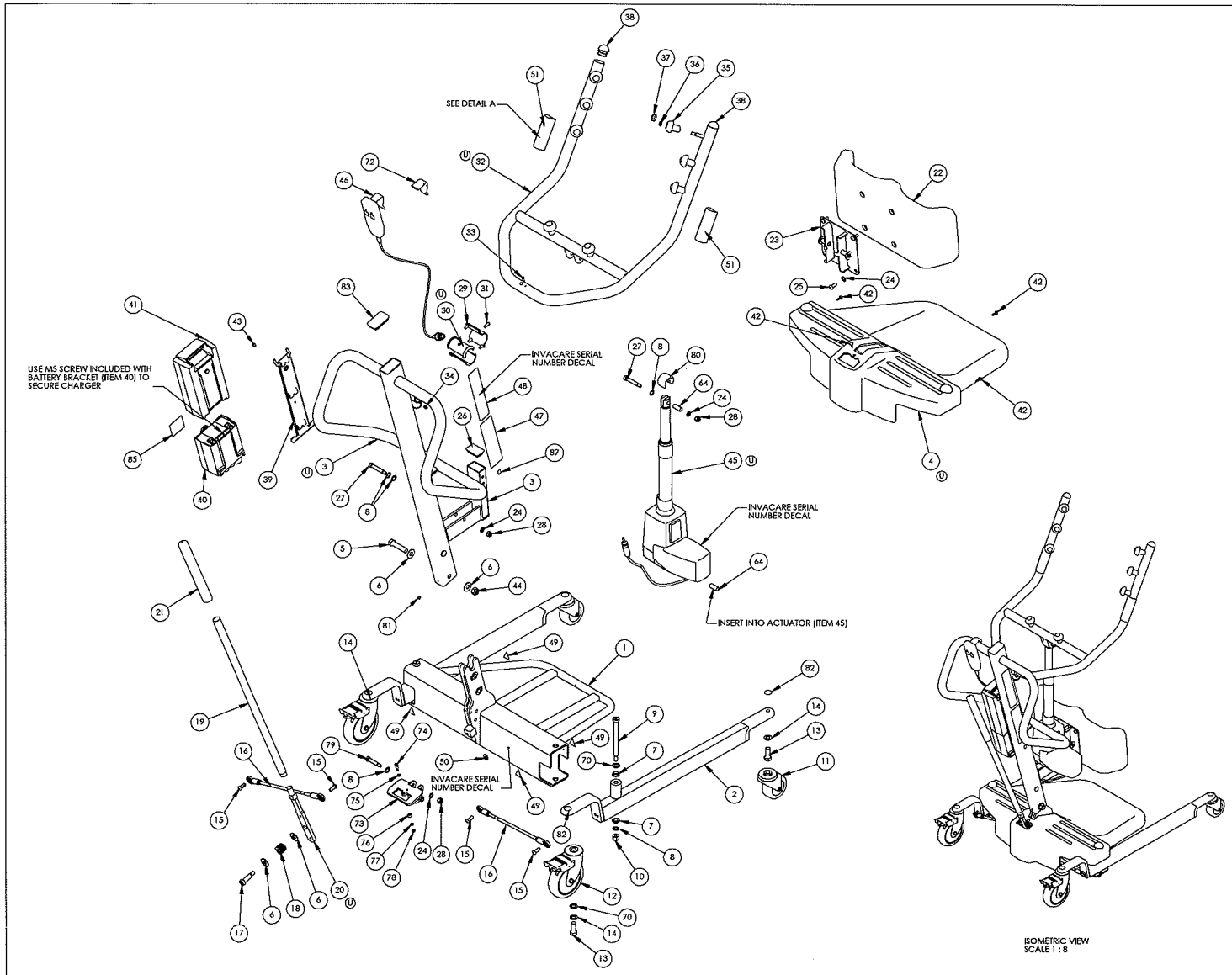

ISOMETRIC VIEW
SCALE 1 : 8

SHEET 1 OF 2

PART NO RPS350-1E

ITEM NO.	PART NO.	DESCRIPTION	QTY.
1	1147175	CBE WLDMT, SUPPORT CROSS W/ FOOTREST	1
2	1095671	ISG WLDMT, LEG STAND UP LIFT	2
U 3	1156181	ASM, HANDLE LIFT 350 W/ TAPE	1
U 4	1156179	SHROUD, PORTABLE OVERHEAD LIFT W/ FOOTREST	1
5	1078979	BOLT, 1/2-13 X 2.25 HX	1
6	1068305	WASHER, .505X1.124X.100 PLAIN	4
7	1062419	BUSHING, FLANGED	4
8	1065214	WASHER, Ø.39 FLAT	7
9	1062424	SCREW, Ø.50 X 5.00 X 3/8-16 SOC HD SHLDR	2
10	1065216	NUT, 3/8-16 HX LOCK	2
11	1155118	CASTER, 3" SWIVAL	2
12	1123539	ASM, CASTER & WHEEL 5" SWIVEL W/BRAKE	2
13	1073884	BOLT, 1/2-13 X 1.25 HX	4
14	1014371	WASHER, Ø.50 RHS LOCK	4
15	1155720	SCREW, 5/16-18 X .81 SOC BUT HD CAP W/PATCH	4
16	1065152	ASM, TIE ROD	2
17	1029134	SCREW, Ø.50 X 1.25 SOC HD SHDLR W/PATCH	1
18	1064122	SPRING, 1.03 X 1.06	1
19	1078287	ISG WLDMNT, HANDLE	1
U 20	1156176	TBK WLDMT, MTG HANDLE	1
21	1032246	GRIP, CANE	1
22	1070803	PAD, KNEE	1
23	1097071	ASM, PAD MTG	1
24	1025704	WASHER, FLAT .330 X .625 X .050	8
25	1071955	SCREW, 5/16-18 X .75 SOC BUT HD CAP	4
26	1065360	CAP, END	2
27	1064455	SCREW, .38 X 1.75 X 5/16-18 SOC HD SHLDR	2
28	1064267	NUT, 5/16-18 LOCK HVY HX	4
29	1071834	ISG BRACKET, HORN	1
U 30	1156173	BUSHING, HORN	2
31	1007269	SCREW, 1/4-20 X .62 SOC BUT HD CAP	4
U 32	1156174	ISG WLDMNT, HORN	1
33	126420000	SCREW, #8-15 X .625 PH PAN HD TAP	1
34	1025195	NUT, 1/4-20 LOCK HX	4
35	1070177	KNOB, HOOK	8
36	1028769	NUT, 5/16-18 LOCK HX	8
37	1070902	CAP, HOOK	8
38	1071249	PLUG, BALL 1.25	2
39	1078284	BRACKET, BATTERY	1
40	1078275	CONTROLLER, LINAK	1
41	1078276	BATTERY PACK, LINAK	2
42	1023632	CLIP, CHRISTMAS TREE	4
43	1078980	SCREW, 10-24 X .25 PH PAN	3
44	1078981	NUT, 1/2-13 LOCK HX	1
U 45	1156180	ACTUATOR, LINAK	1
46	1078283	HB41, HANDSET	1
47	1167425	LABEL,MINI MANUAL LABEL, RELIANT 350 EU	1
48	1073705	DECAL, RELIANT 350 LOGO	1
49	1079112	LABEL, ATTENTION	4
50	1079113	LABEL, YEAR OF MFR	2
51	1076388	GRIP, HAND	2
52	1088279	INSERT, CARTON	2
53	1088272	INSERT, CARTON	1
54	1156167	CARTON, SHIPPER COVER	1
55	1088273	INSERT, CARTON	1
56	1079691	CARTON, SHIPPER	2
57	1144401	CARTON, SHIPPER BOTTOM	1
58	1088278	INSERT, CARTON	1
59	40131x044	CARTON, SHIPPER 11-1/2X7-1/4X3	1
60	1020635	BAG, 24 X 12 PLASTIC	1
61	1078306	BRACKET, BATTERY	1
62	1078985	MANUAL, OWNER'S LIFT 350 UK,FR,GER,DUT	1
63	1079135	POWERCORD, EUROPE CABLE	1
64	1064443	BUSHING, Ø.38 X 1.09	2
65	10369X000	WRENCH, ALLEN 3/16	1
66	1078274	CHARGER, LINAK	1
67	1115717	INSERT, CARTON	1
68	1115718	INSERT, CARTON	2
69	1081004	PRODUCT SPEC., RELIANT PATIENT LIFT	0
70	1026174	WASHER, .510X.875X.055 PLAIN	4
71	1144402	REINFORCEMENT, CORNER CARTON	4
72	1152416	CAP, CLIP RUBBER GRAY	1
73	1155352	WLDMT,INDEX PLATE	1
74	1155353	SCREW, 1/4X.51 SOC HD SHLDR	1
75	1155354	WASHER, .270 X .400 X .065/036 PLAIN	1
76	1155138	ROLLER, INDEX PLATE	1
77	1155355	WASHER, .210 X .400 X .065/036 PLAIN	1
78	1155356	NUT, 10-32 LOCK/NYLON	1
79	1031665	SCREW, 3/8 X 1.50 SOC HD SHLDR	2
80	1155357	CAP, ACTUATOR	1
81	1155358	SCREW, #8-15 X .250 PH PAN HD TAP	1
82	1155117	MYLAR, CASTOR BOLT	4
83	1065361	CAP, 2.50 X 1.50 END	1
84	1079134	POWERCORD, UK,CABLE	1
85	1079658	LABEL, CE RFG REP	1
* 86	1134846	SHEET, INSTRUCTION RECYCLING	1
87	1136841	LABEL, RECYCLING	1
88	1076513	CARD, VIGILANCE	1

*NOT SHOWN

▲ = KEY CHARACTERISTIC IDENTIFICATION

THIS IS THE PROPERTY OF INVACARE CORPORATION AND IS LOANED SUBJECT TO THE AGREEMENT THAT THE SAME OR ANY PARTS OF IT SHALL NOT BE REPRODUCED OR COPIED NOR USED FOR MANUFACTURE WITHOUT OUR CONSENT AND SHALL BE RETURNED ON DEMAND. UNLESS OTHERWISE SPECIFIED ALL DIMENSIONS ARE IN MM AND ARE NOMINAL VALUES. DO NOT SCALE THIS DRAWING

SHEET 1 OF 2

REV LTR	CAN NO	REVISION	DATE	BY	CK	INC	INC	INC	REV LTR	CAN NO	REVISION	DATE	BY	CK	INC	INC	INC	REV LTR	CAN NO	REVISION	DATE	BY	CK	INC	INC
U	10446032	REVISE TO PRELIM REV 00; REPLACE 1097074 WITH 1156181, 1078294 WITH 1156179, 1078289	10/14/10	DM					S	09460028	REVISE TO PRELIM REV 01; CHG 1065214 QTY 8 TO 7, 1026174 QTY 2 TO 4; REM 1078986	05/30/10	JJ					O	09460241	REM 1069548, & 1073706 FROM BOM; REV 1065214 BOM QTY	01/30/07				
		WITH 1156176, 1079175 WITH 1156173, 1071093 WITH 1156174, 1078974 WITH 1156180							R	09460022	RELEASE AT PRELIM REV 00; ADD 1152416	07/29/09	RDH							6 WAS 3; REV 1025704 BOM QTY 6 WAS 5; REM "SHORT", "MEDIUM",					
T	10460015	REVISED @ PRELIM REV 00; REPLACE 1073699 WITH 1167425,	08/31/10						Q	09460047	REVISE TO PRELIM REV 00, REM SHEET 1 & 2	04/17/09	WN							& "TALL" NOTES; ADD SHEET 3 AND 4					
		1144403 WITH 1156167; REM 1079655							P	09460261	REVISE TO PRELIM REV 00;REV CHINA WAS KUNSHAN ON SHEET 3 & 4	01/11/08	WQ					N	00460333	#1 - CORRECT DWG - 1079658 WAS 1075653	12/6/05				

MATERIAL NO	
RAW MATERIAL DESCRIPTION	
BAR STOCK NO.	
SCALE 1:12	DATE 12/11/06
DRAWN BY: R.ZHOU	

PART DESCRIPTION: ASM, LIFT RELIANT 350 POWER LOW BASE EURO

DRAWING SIZE: D

INVACARE CORP. ELYRIA OHIO

PART NO RPS350-1E

PART NO RPS350-1E

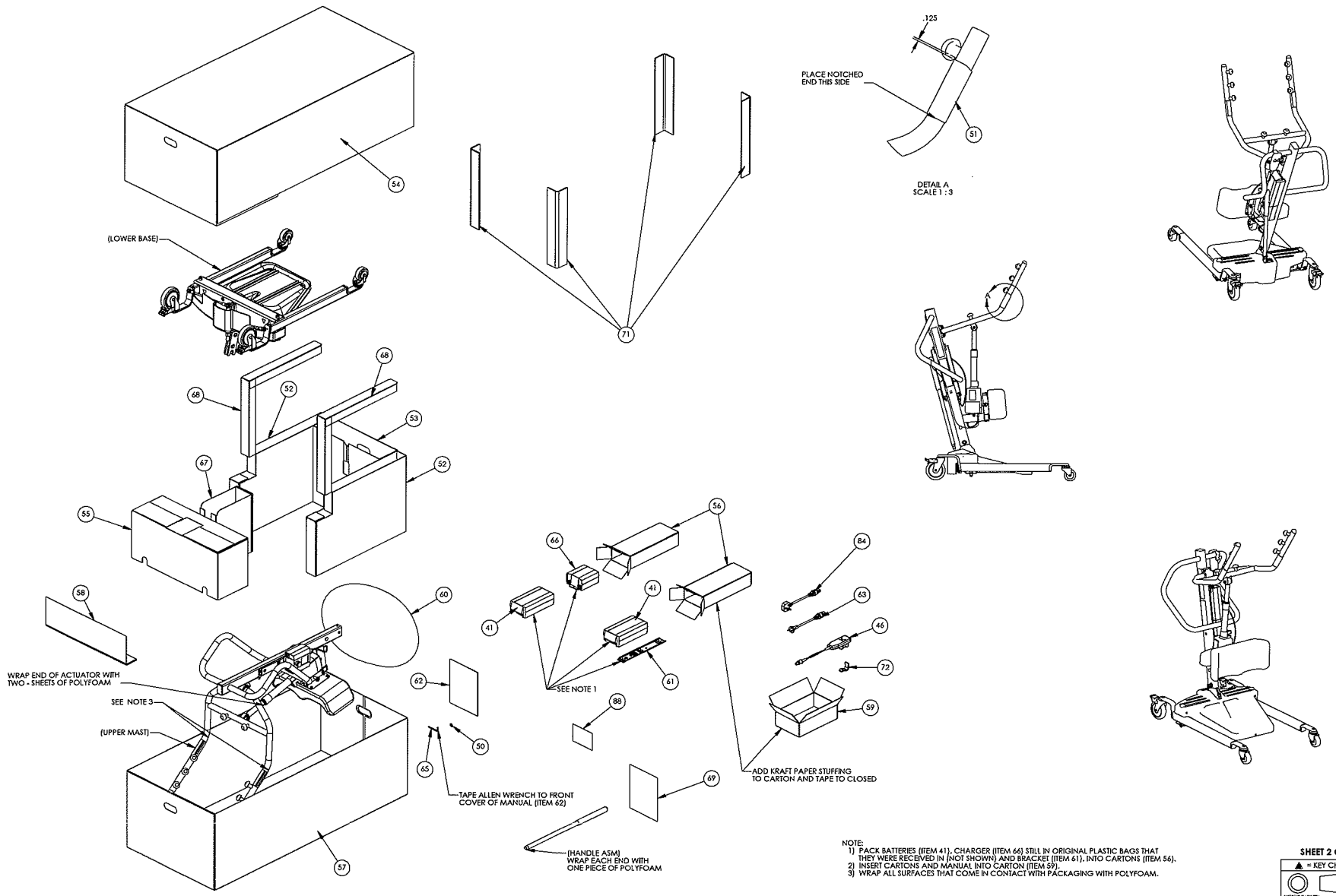

NOTE:
1) PACK BATTERIES (ITEM 41), CHARGER (ITEM 66) STILL IN ORIGINAL PLASTIC BAGS THAT THEY WERE RECEIVED IN (NOT SHOWN) AND BRACKET (ITEM 61), INTO CARTONS (ITEM 56).
2) INSERT CARTONS AND MANUAL INTO CARTON (ITEM 59).
3) WRAP ALL SURFACES THAT COME IN CONTACT WITH PACKAGING WITH POLYFOAM.

SHEET 2 OF 2

▲ = KEY CHARACTERISTIC IDENTIFICATION

REV LTR	C/N NO	REVISION	DATE	BY	CK	ENG	ENG	ENG	REV LTR	C/N NO	REVISION	DATE	BY	CK	ENG	ENG	ENG	REV LTR	C/N NO	REVISION	DATE	BY	CK	ENG	ENG
									U	1046032	SEE SHEET 1	10/14/10	DM					R	0946022	SEE SHEET 1	07/29/09	RZH			
									T	1046015	SEE SHEET 1	08/31/10						Q	0846047	SEE SHEET 1	04/17/09	WW			
									S	0946028	SEE SHEET 1	06/30/10	JJ					P	0746026	SEE SHEET 1	01/11/08	WO			
																		O	0646024	SEE SHEET 1	01/30/07				

MATERIAL NO
MATERIAL DESCRIPTION
AMP FILE NO.
SCALE 1 : 12 DATE 12/11/06
DRAWN BY R.ZHOU

PART DESCRIPTION: ASM, LIFT RELIANT 350 POWER LOW BASE EURO

DRAWING SIZE D

INVACARE CORP. ELYRIA OHIO

PART NO RPS350-1E